User's Guide
SBOU076–September 2008

Serial-Bus Evaluation Module

This user's guide describes the characteristics, operation, and the use of the Serial-Bus-EVM evaluation module. It provides a detailed description of the hardware configuration. The Serial-Bus-EVM is a general-purpose tool used to generate I^2C™, SPI™, and general-purpose digital input/output (I/O) data. The EVM contains a solderless breadboard for prototyping circuits. A common typical application for this tool is to communicate with temperature sensors over an I^2C or SPI connection.

Contents

1 Overview 2
2 System Setup 4
3 Serial-Bus-EVM Hardware Setup 4
4 Script Editor Software Overview 13
5 Bill of Materials 15

List of Figures

1 Hardware Included with the Serial-Bus-EVM 3
2 USB DIG Platform Hardware Setup 4
3 Connecting the Two EVM PCBs 5
4 Connecting Power to the EVM 6
5 Connecting the USB Cable 7
6 Interface Test Board Signal Connections 8
7 Interface Test Board Banana Jack and Terminal Strip Connections 9
8 Interface Test Board Test Points and Ground Connection 10
9 Unshielded Cable and Associated Problems 11
10 Cable Design with Shield (Eliminates Capacitive Coupling Between Cables) 12
11 Shielded Cable Build on Solder Cup D-Sub 12
12 tioScript Editor Software Access—Properly Installed 13
13 tioScript Editor Window 14

Microsoft, Windows are registered trademarks of Microsoft Corporation.
SPI is a trademark of Motorola, Inc.
I^2C is a trademark of NXP Semiconductors.
All other trademarks are the property of their respective owners.

1 Overview

The Serial-Bus-EVM is a data acquisition system that allows you to both prototype and communicate with simple digital and mixed-signal circuits. The EVM consists of two primary components: the USB DIG Platform and the Interface Test Board. The USB DIG Platform interfaces with a connected PC and generates the I^2C, SPI, and general-purpose digital I/O data. This document gives a brief overview of the USB DIG Platform. For a detailed description of the USB DIG Platform, see the *USB DIG Platform User Guide*, available for download as a separate document from the Texas Instruments web site at http://www.ti.com. The Interface Test Board plugs into the USB DIG Platform and allows a prototyped circuit to be connected to the digital resources. Note that the *Serial-Bus/USB-DIG-EVM Quick-Start Video* (available as a separate download) provides a video tutorial that accompanies this EVM and user guide. This video gives detailed hardware and software examples for the Script Editor. It is highly recommended that users watch this video before starting to work with the Serial-Bus EVM. Additional support documents are listed in the section of this guide entitled *Related Documentation from Texas Instruments*.

Throughout this document, the abbreviation *EVM* and the term *evaluation module* are synonymous with the Serial-Bus-EVM.

1.1 Hardware Included

Figure 1 shows the hardware included with the Serial-Bus-EVM kit. Contact the factory if any component is missing. It is highly recommended that you check the TI web site at http://www.ti.com to verify that you have the latest version of the software. It is also recommended that you watch the Quick-Start Video (available for download from the TI web site) before using the Serial-Bus-EVM.

The complete kit includes the following items:

- USB DIG platform printed circuit board (PCB)
- Test interface PCB
- TMP101 I^2C temperature sensor
- TMP122 SPI temperature sensor
- Wire kit
- 6V universal power supply
- USB cable
- CD-ROM containing this user's guide, product software, and a demonstration video

1.2 Related Documentation from Texas Instruments

The following document provides information regarding Texas Instruments integrated circuits used in the assembly of the Serial-Bus-EVM. This user's guide is available from the TI web site under literature number SBOU076. Any letter appended to the literature number corresponds to the document revision that is current at the time of the writing of this document. Newer revisions may be available from the TI web site at http://www.ti.com/, or call the Texas Instruments Literature Response Center at (800) 477-8924 or the Product Information Center at (972) 644-5580. When ordering, identify the document by both title and literature number.

Document	Literature Number
Serial-Bus/USB-DIG-EVM Quick-Start Video	SBOU075
tioScript Editor User's Guide	SBOU058
USB DIG Platform Users Guide	SBOU058
USB DIG Schematic	SBOR002
TMP101 Product Data Sheet	SBOS231
TMP122 Product Data Sheet	SBAS272

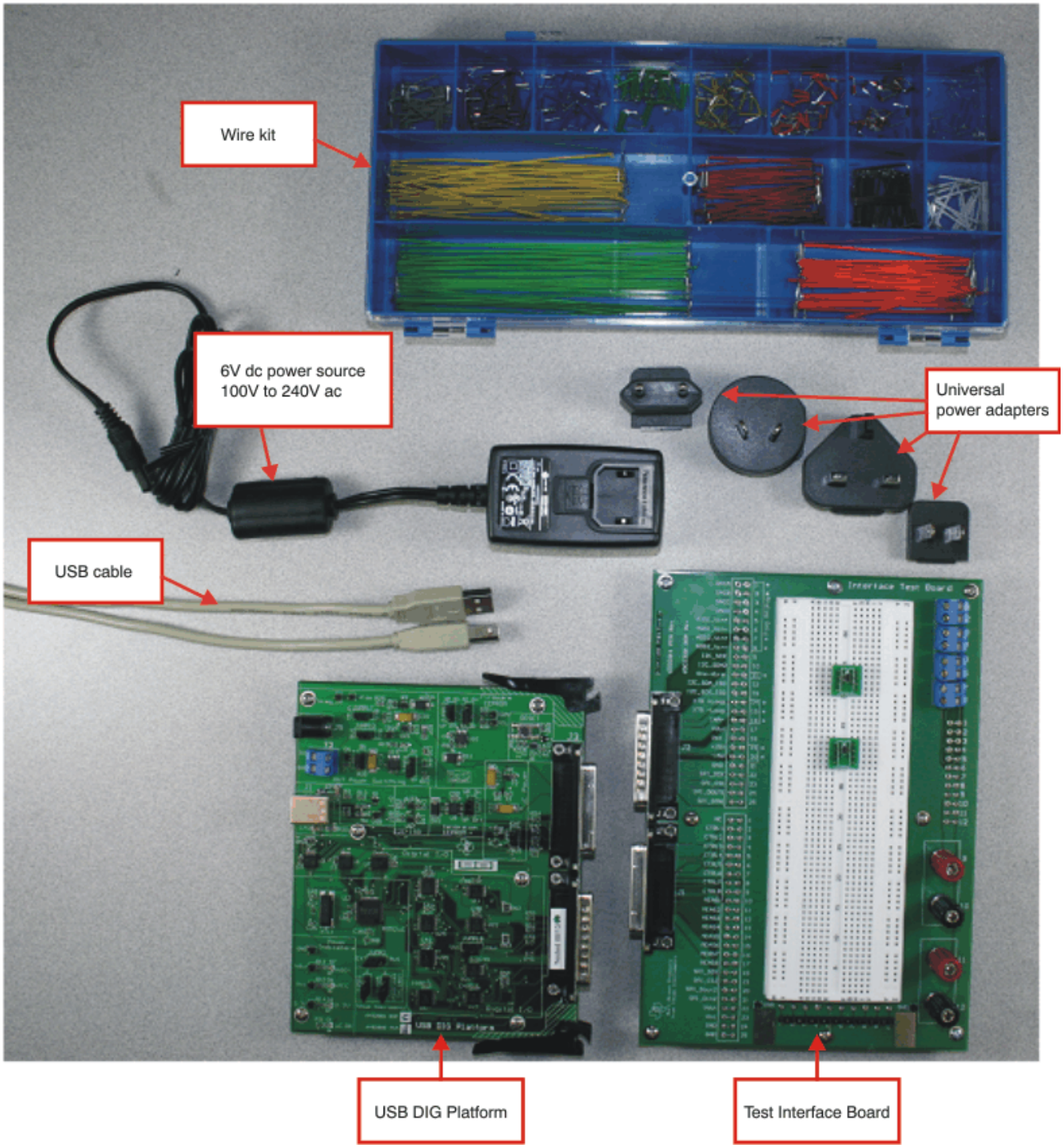

Figure 1. Hardware Included with the Serial-Bus-EVM

1.3 If You Need Assistance

If you have questions about the Serial-Bus-EVM, send an e-mail to the Linear Applications Team at precisionamps@list.ti.com. Include *Serial-Bus-EVM* as the subject heading.

1.4 Information About Cautions and Warnings

This document contains caution statements.

> **CAUTION**
>
> This is an example of a caution statement. A caution statement describes a situation that could potentially damage your software or equipment.

The information in a caution or a warning is provided for your protection. Please read each caution carefully.

2 System Setup

Figure 2 shows the system setup for the USB DIG Platform. The PC runs software that communicates with the USB DIG Platform. The USB DIG Platform generates the analog and digital signals used to communicate with the Interface Test Board. Pin sockets on the Test Board allow access to the 50 signals from the USB DIG Platform. Terminal strips and banana jacks provide a convenient way to connect external equipment to the circuit under test and development.

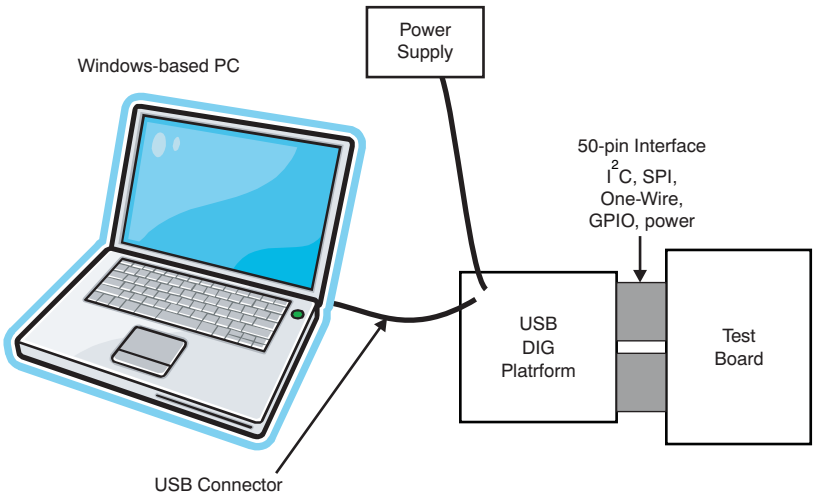

Figure 2. USB DIG Platform Hardware Setup

The PC must meet these minimum operating requirements:

- Microsoft® Windows® operating system, XP or higher
- Available USB port
- Compatible with US and European regional settings

3 Serial-Bus-EVM Hardware Setup

The Serial-Bus-EVM hardware setup involves connecting the two PCBs of the EVM together, applying power, connecting the USB cable, and setting the jumpers. This section presents the details of this procedure.

3.1 Electrostatic Discharge Warning

Many of the components on the Serial-Bus-EVM are susceptible to damage by electrostatic discharge (ESD). Customers are advised to observe proper ESD handling precautions when unpacking and handling the EVM, including the use of a grounded wrist strap at an approved ESD workstation.

CAUTION

Failure to observe ESD handling procedures may result in damage to EVM components.

3.2 Connecting the Hardware

To connect the two PCBs of the Serial-Bus-EVM together, gently push on both sides of the D-SUB connectors (as shown in Figure 3). Make sure that the two connectors are completely pushed together; loose connections may cause intermittent operation.

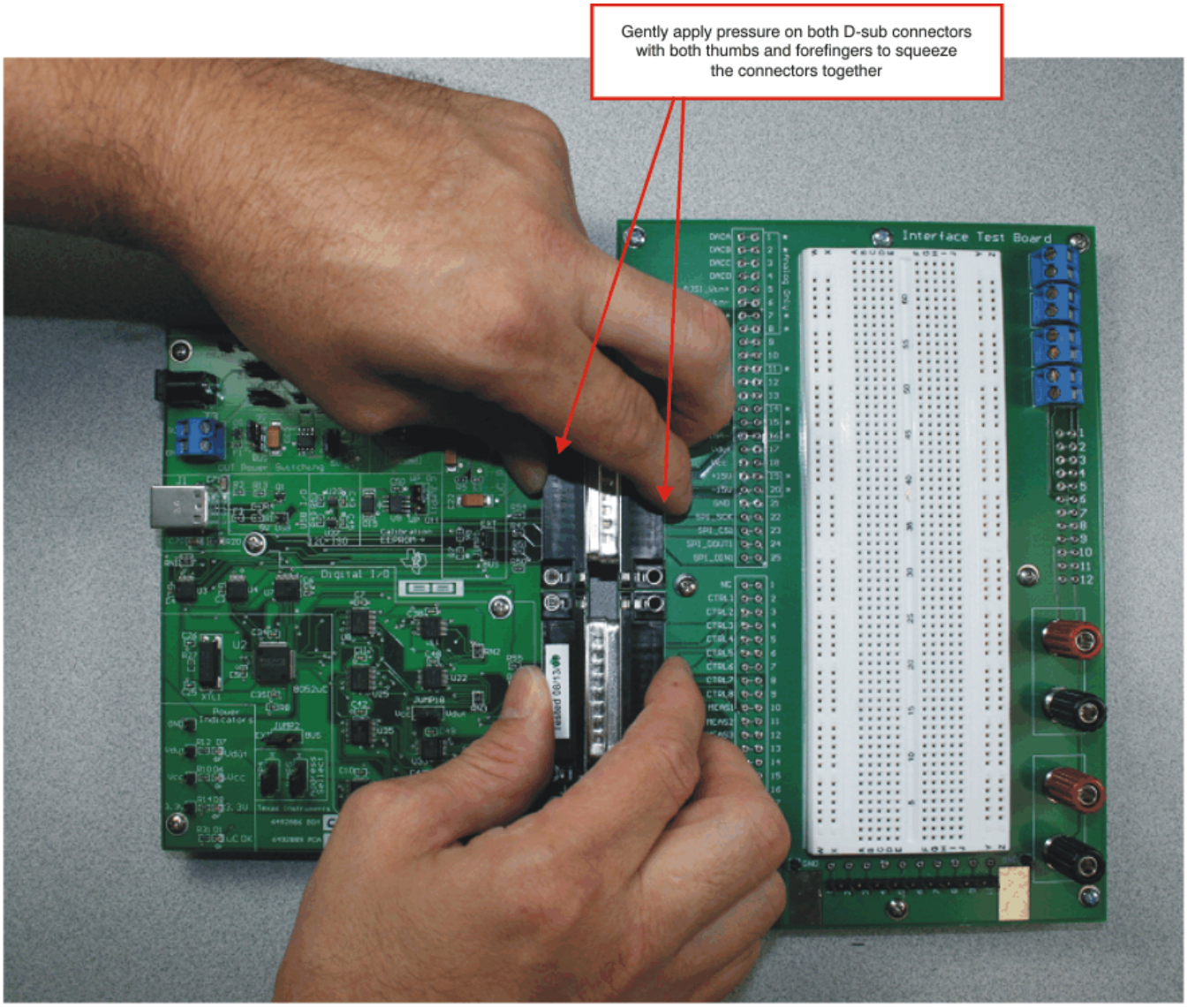

Figure 3. Connecting the Two EVM PCBs

3.3 Connecting Power

After the two parts of the Serial-Bus-EVM are connected, as shown in Figure 4, connect the power to the EVM. Always connect power before connecting the USB cable. If you connect the USB cable before connecting the power, the computer will attempt to communicate with an unpowered device that will not be able to respond.

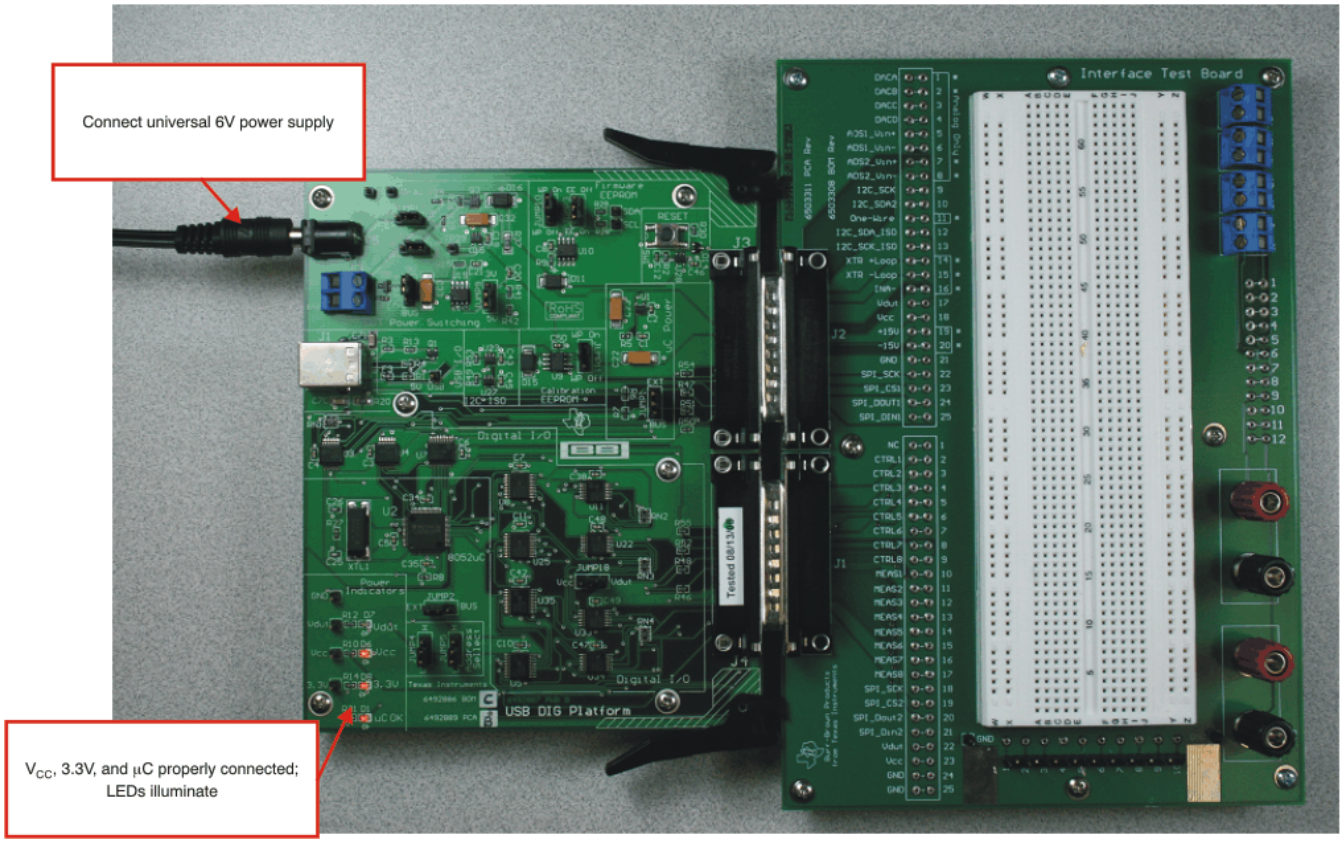

Figure 4. Connecting Power to the EVM

3.4 Connecting the USB Cable to the Serial-Bus-EVM

Figure 5 shows the typical response to connecting the USB DIG platform to a PC USB port for the first time. Note that the EVM must be powered on before connecting the USB cable. Typically, the computer will respond with a *Found New Hardware, USB Device* pop-up. The pop-up typically changes to *Found New Hardware, USB Human Interface Device*. This pop-up indicates that the device is ready to be used. The USB DIG platform uses the *Human Interface Device Drivers* that are part of the Microsoft® Windows® operating system.

In some cases, the Windows *Add Hardware Wizard* will pop up. If this prompt occurs, allow the system device manager to install the *Human Interface Drivers* by clicking **Yes** when requested to install drivers.

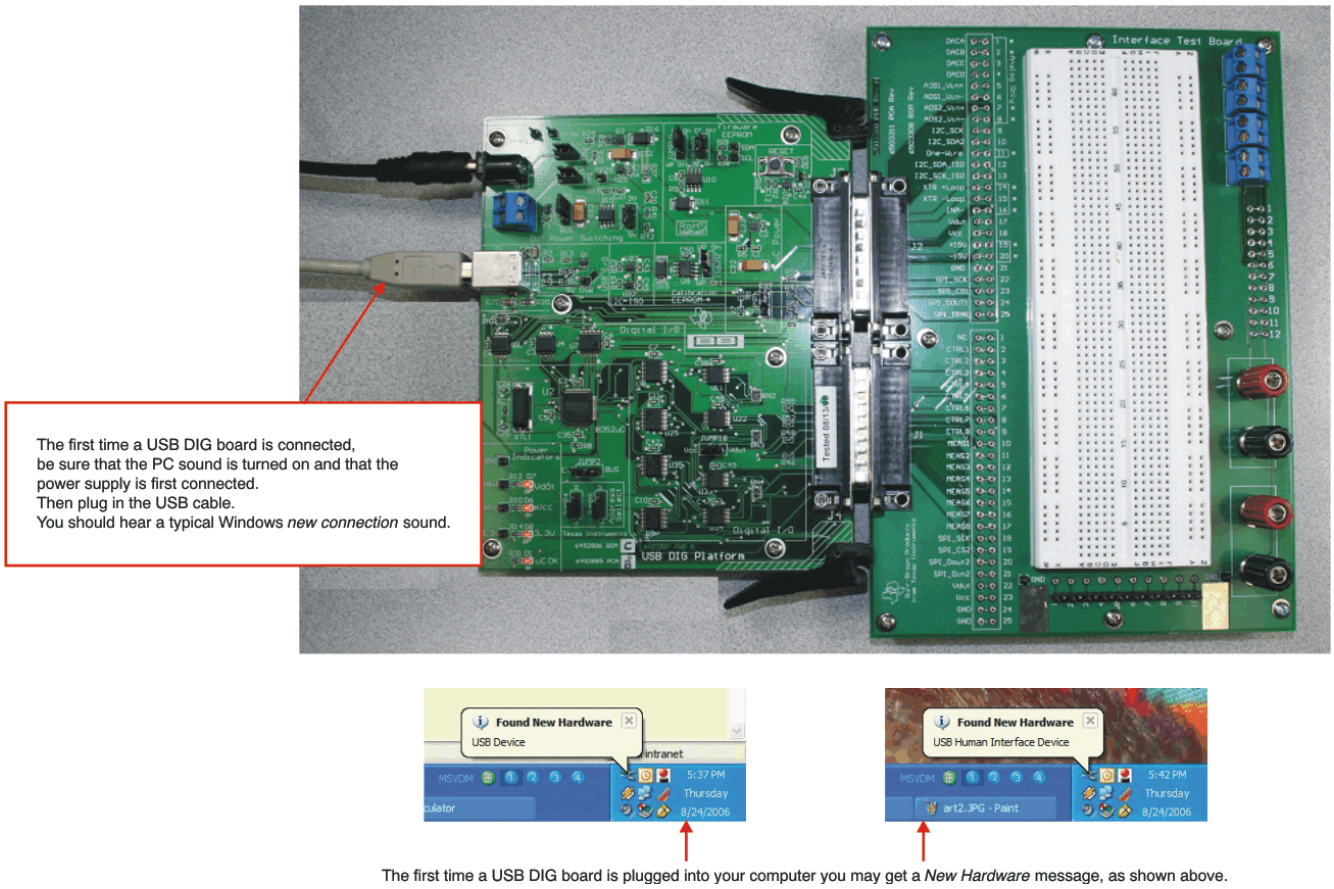

Figure 5. Connecting the USB Cable

3.5 Prototyping a Circuit—Using the Interface Test Board

Connections to the signals from the USB DIG Platform are made in the pin socket area. There are 50 signals (2 x 25 pin connectors) in the pin socket area. The signals are connected from the pin sockets to the device under test using 22-gauge solid wire, as shown in Figure 6.

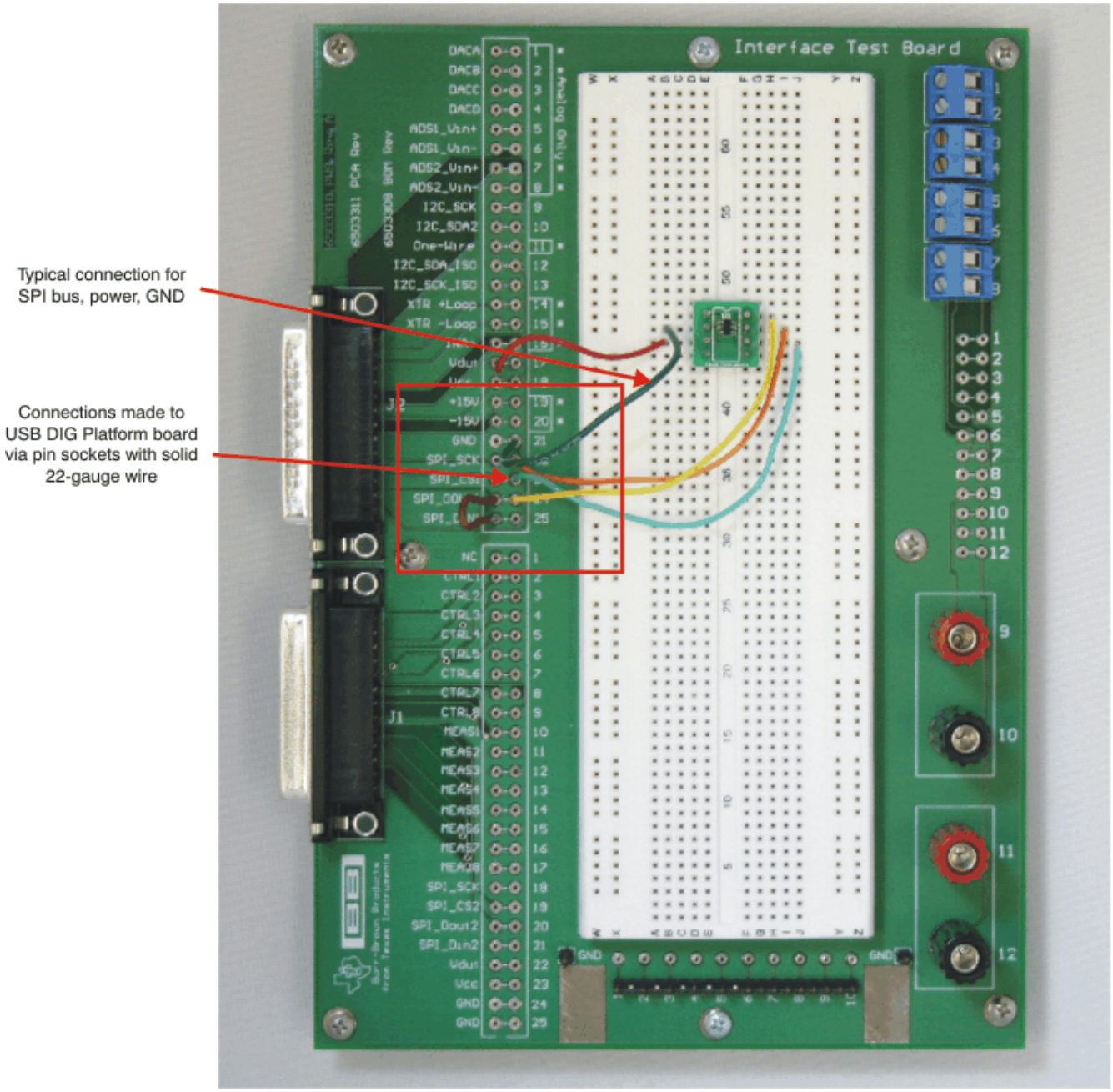

Figure 6. Interface Test Board Signal Connections

Banana jacks and terminal strips can be used to connect external equipment to the circuit under test. The pin sockets allow you to wire the circuit under test to the banana jacks and terminal strips, as Figure 7 illustrates.

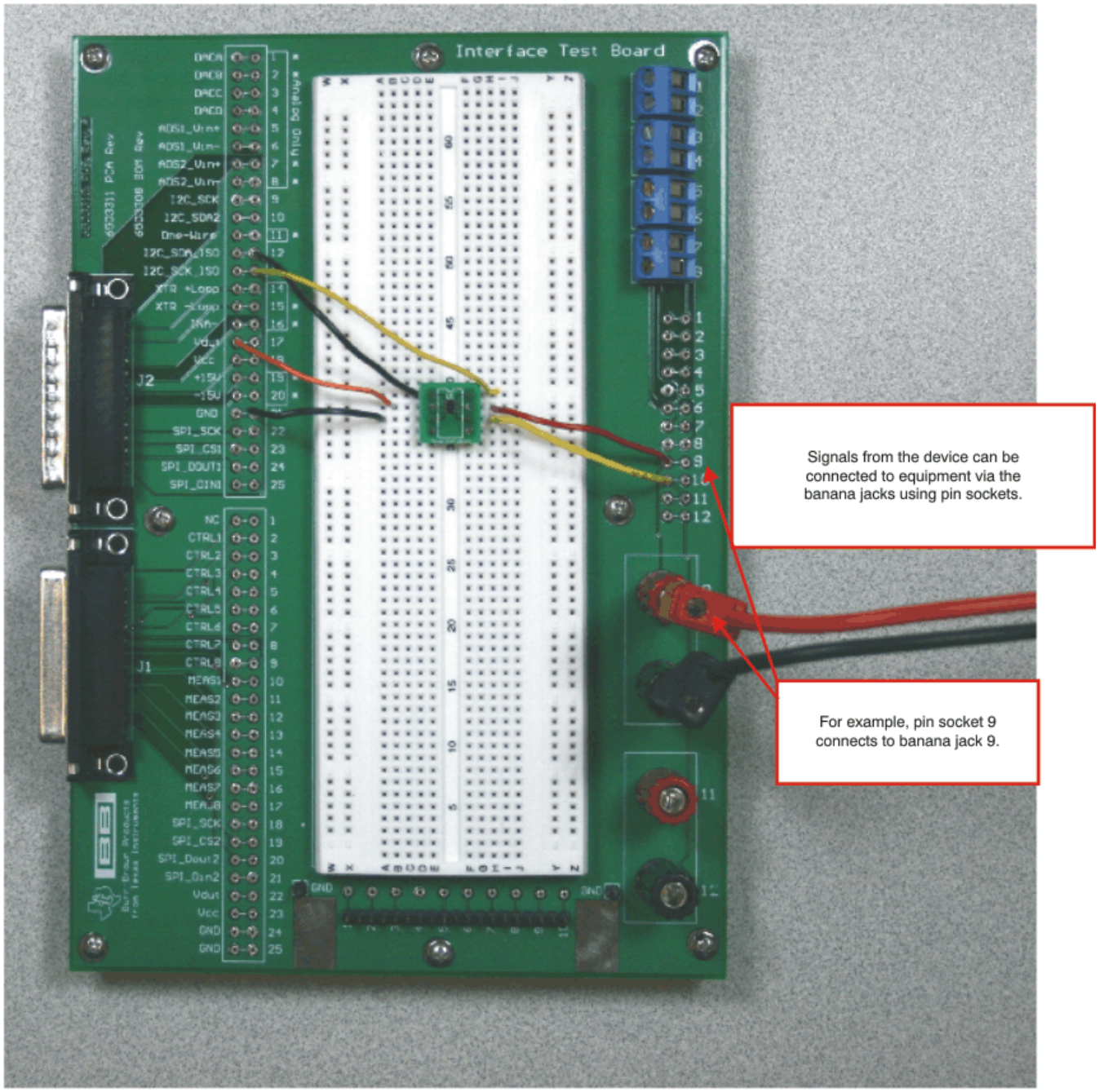

Figure 7. Interface Test Board Banana Jack and Terminal Strip Connections

Test points allow for connection to key nodes in the circuit. Figure 8 shows how an oscilloscope is connected to the circuit under test. The pin sockets allow you to wire the circuit under test to the test points. Also note the ground pad and ground test point.

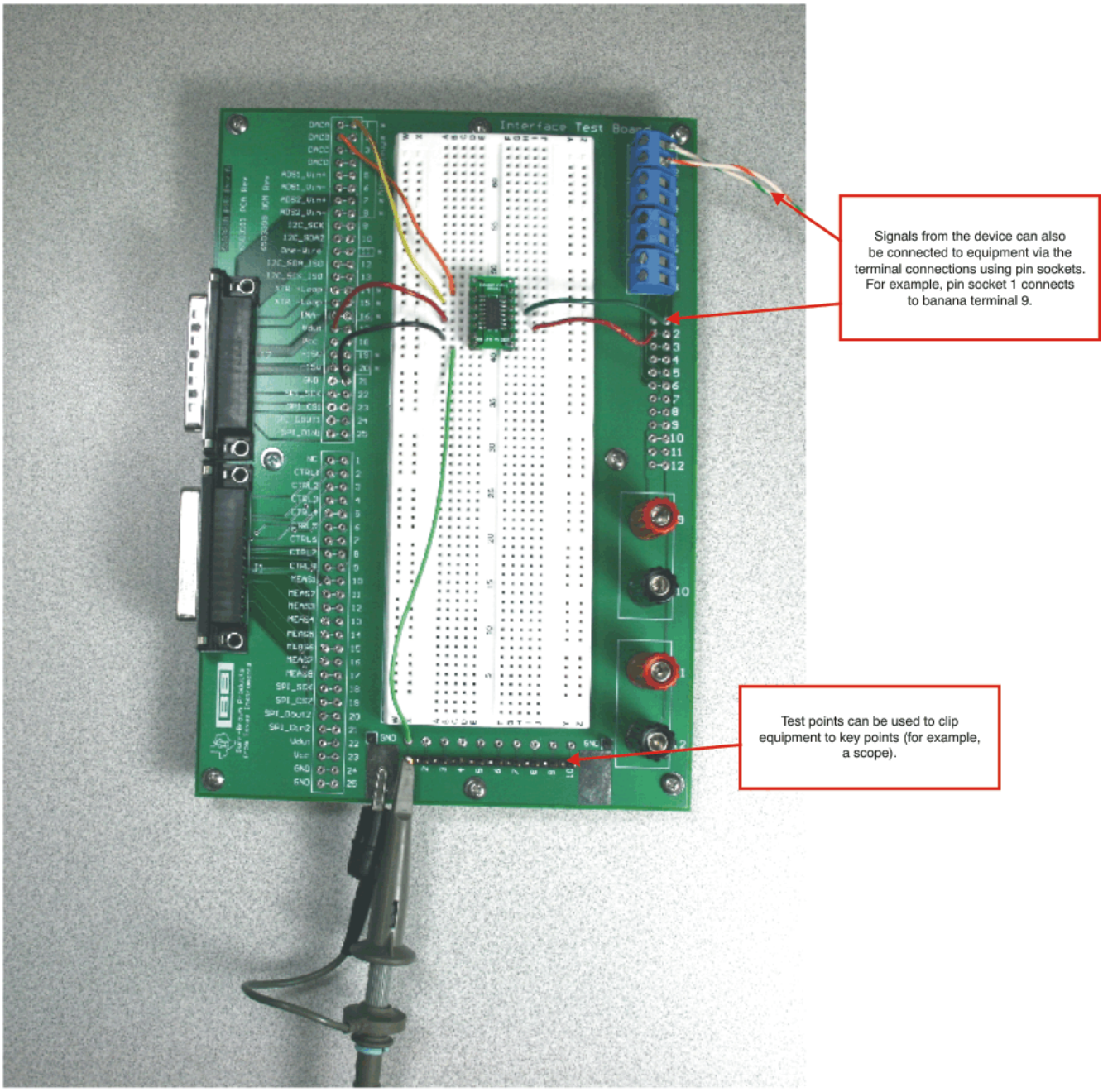

Figure 8. Interface Test Board Test Points and Ground Connection

3.6 Direct Connections from the USB DIG Platform

In some cases, it may be more useful to connect signals directly from the USB DIG Platform to some custom hardware. This method typically uses a cable that connects to the D-SUB connector. It is recommended that you use shielded coaxial cable to directly connect I^2C and SPI signals to the custom hardware. This direct connection eliminates capacitive coupling between the cables. Figure 9 shows a cable design that does not use shielded coaxial cable and the problems typically associated with it. Figure 10 shows a cable design using shielded coaxial cable. Figure 11 shows a photograph of a shielded cable on a solder cup D-sub connector.

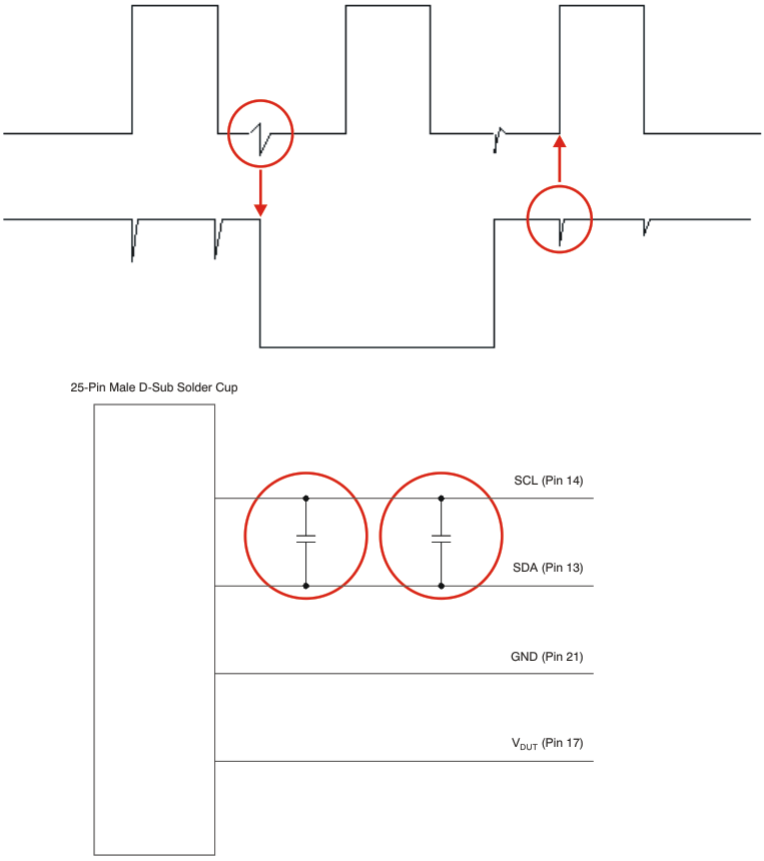

Figure 9. Unshielded Cable and Associated Problems

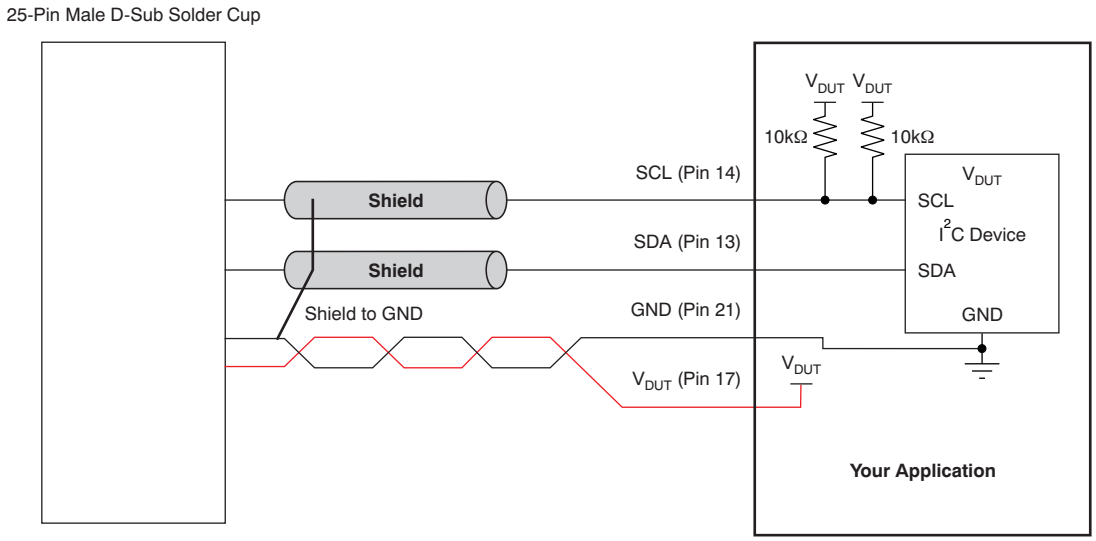

Figure 10. Cable Design with Shield (Eliminates Capacitive Coupling Between Cables)

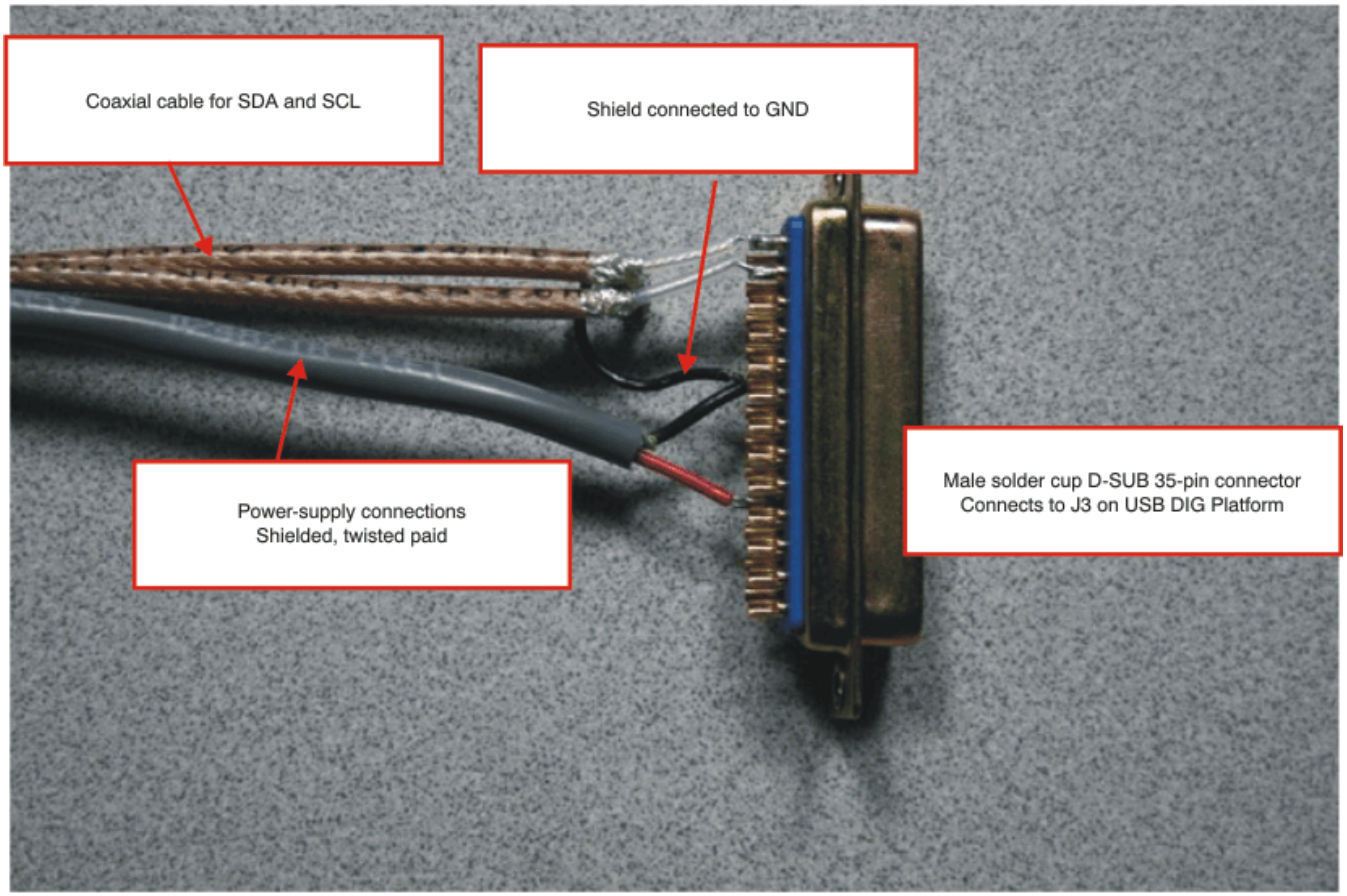

Figure 11. Shielded Cable Build on Solder Cup D-Sub

4 Script Editor Software Overview

This section discusses how to install and use the Script Editor software. The tioScript Editor is a software program that allows you to enter a series of commands (script) to communicate with and evaluate a device under test. For example, a script can be written to communicate with an I^2C temperature sensor. The Script Editor can be conceptualized as a programming environment. The programming language of the script has its own commands and syntax. Complete details of the tioScriptEditor language, and the operation of the Script Editor, are described in the tioScriptEditor User Guide (available through the Texas Instruments web site).

4.1 tioScript Editor Software Install

Follow these steps to install the Script Editor software:

Step 1. Software can be downloaded from the Serial-Bus-EVM web page, or from the disk included with the Serial-Bus-EVM , which contains a folder called *Install_software/*.

Step 2. Find the file called *tioScriptInstall.exe*. Double-click the file to start the installation process.

Step 3. Follow the on-screen prompts to install the software.

Step 4. To remove the application, use the Windows Control Panel utility, *Add/Remove Software*.

The Serial-Bus-EVM/USB DIG Platform Quick-Start Video (available for download from the TI web site) gives more details regarding the initialization of the software.

4.2 Starting the Script Editor Software

The tioScript Editor software can be operated through the Windows *Start* menu. From Start, select *All Programs*; then select the *tioScript* list item, then *tioScript.exe*. Figure 12 shows how the software should appear in the list if it has been properly installed.

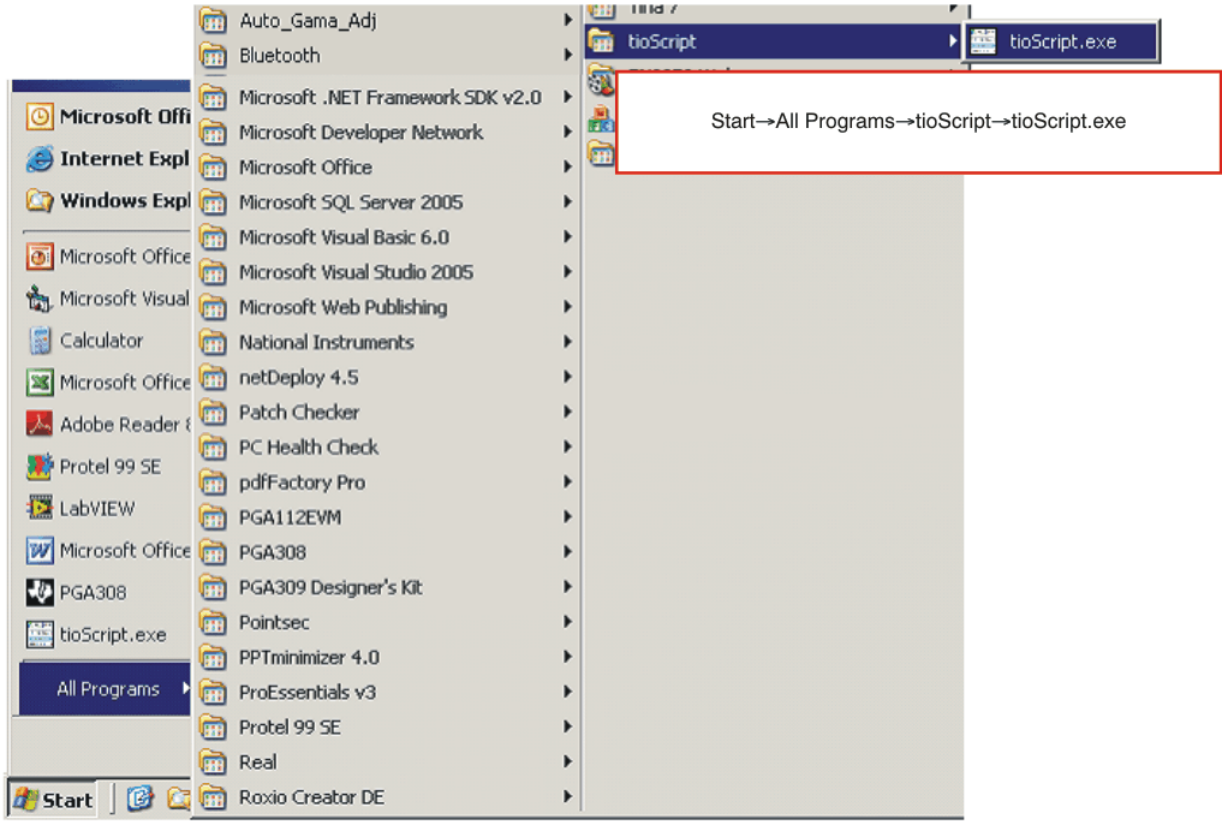

Figure 12. tioScript Editor Software Access—Properly Installed

4.3 Using the Script Editor Software

Figure 13 shows the major features of the Script Editor. A more detailed description is given in the tioScript Editor User Guide. The Serial-Bus-EVM/USB DIG EVM Quick-Start Video (SBOU075) also gives a detailed description, including examples.

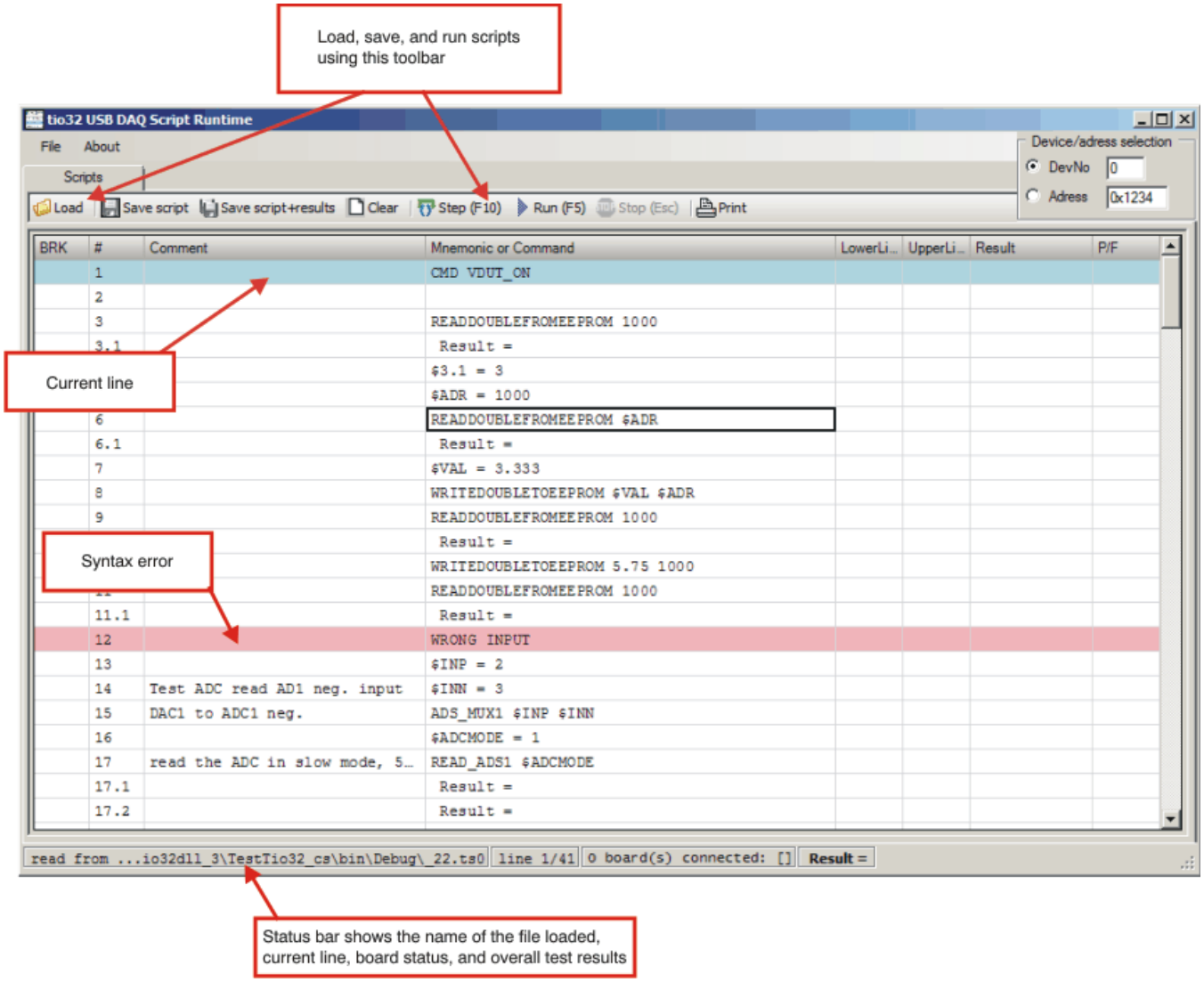

Figure 13. tioScript Editor Window

5 Bill of Materials

Table 1 shows the parts list for the Test Interface Board.

Table 1. Test Interface Board Parts List

No.	Quantity	Ref Des	Description	Vendor	Part Number
1	134	NA	Socket, Discrete (Pin Socket)	Tyco Electronics Amp	5050863-5
2	1	J2	CONN D-SUB PLUG R/A 25POS	AMP/Tyco Electronics	747238-2
3	1	J1	CONN D-SUB RCPT R/A 25POS	AMP/Tyco Electronics	745783-2
4	4	T1, T2, T3, T4	2-Position Terminal Strip, Cage Clamp, 45°, 15A, Dove-tailed	On-Shore Technology Inc	ED300/2
5	2	9, 11	POST BINDING INSUL GROUNDED RED	Johnson Components	111-0702-001
6	2	10, 12	POST BINDING INSUL GROUNDED BLACK	Johnson Components	111-0703-001
7	1	proto	SUPER-STRIP	3M	923252
8	8	—	Standoffs, Hex , 4-40 Threaded, 0.500" length, 0.250" OD, Aluminum Iridite Finish	Keystone	2203
9	8	—	SCREW MACHINE PHIL 4-40X1/4 SS	Building Fasteners	PMSSS 440 0025 PH
10	4	—	WASHER LOCK INT TOOTH #8 ZINC	Building Fasteners	INT LWZ 008

EVALUATION BOARD/KIT IMPORTANT NOTICE

Texas Instruments (TI) provides the enclosed product(s) under the following conditions:

This evaluation board/kit is intended for use for **ENGINEERING DEVELOPMENT, DEMONSTRATION, OR EVALUATION PURPOSES ONLY** and is not considered by TI to be a finished end-product fit for general consumer use. Persons handling the product(s) must have electronics training and observe good engineering practice standards. As such, the goods being provided are not intended to be complete in terms of required design-, marketing-, and/or manufacturing-related protective considerations, including product safety and environmental measures typically found in end products that incorporate such semiconductor components or circuit boards. This evaluation board/kit does not fall within the scope of the European Union directives regarding electromagnetic compatibility, restricted substances (RoHS), recycling (WEEE), FCC, CE or UL, and therefore may not meet the technical requirements of these directives or other related directives.

Should this evaluation board/kit not meet the specifications indicated in the User's Guide, the board/kit may be returned within 30 days from the date of delivery for a full refund. THE FOREGOING WARRANTY IS THE EXCLUSIVE WARRANTY MADE BY SELLER TO BUYER AND IS IN LIEU OF ALL OTHER WARRANTIES, EXPRESSED, IMPLIED, OR STATUTORY, INCLUDING ANY WARRANTY OF MERCHANTABILITY OR FITNESS FOR ANY PARTICULAR PURPOSE.

The user assumes all responsibility and liability for proper and safe handling of the goods. Further, the user indemnifies TI from all claims arising from the handling or use of the goods. Due to the open construction of the product, it is the user's responsibility to take any and all appropriate precautions with regard to electrostatic discharge.

EXCEPT TO THE EXTENT OF THE INDEMNITY SET FORTH ABOVE, NEITHER PARTY SHALL BE LIABLE TO THE OTHER FOR ANY INDIRECT, SPECIAL, INCIDENTAL, OR CONSEQUENTIAL DAMAGES.

TI currently deals with a variety of customers for products, and therefore our arrangement with the user **is not exclusive.**

TI assumes **no liability for applications assistance, customer product design, software performance, or infringement of patents or services described herein.**

Please read the User's Guide and, specifically, the Warnings and Restrictions notice in the User's Guide prior to handling the product. This notice contains important safety information about temperatures and voltages. For additional information on TI's environmental and/or safety programs, please contact the TI application engineer or visit www.ti.com/esh.

No license is granted under any patent right or other intellectual property right of TI covering or relating to any machine, process, or combination in which such TI products or services might be or are used.

FCC Warning

This evaluation board/kit is intended for use for **ENGINEERING DEVELOPMENT, DEMONSTRATION, OR EVALUATION PURPOSES ONLY** and is not considered by TI to be a finished end-product fit for general consumer use. It generates, uses, and can radiate radio frequency energy and has not been tested for compliance with the limits of computing devices pursuant to part 15 of FCC rules, which are designed to provide reasonable protection against radio frequency interference. Operation of this equipment in other environments may cause interference with radio communications, in which case the user at his own expense will be required to take whatever measures may be required to correct this interference.

EVM WARNINGS AND RESTRICTIONS

It is important to operate this EVM within the input voltage range of 6V to 9V and the output voltage range of 0V to 5V.

Exceeding the specified input range may cause unexpected operation and/or irreversible damage to the EVM. If there are questions concerning the input range, please contact a TI field representative prior to connecting the input power.

Applying loads outside of the specified output range may result in unintended operation and/or possible permanent damage to the EVM. Please consult the EVM User's Guide prior to connecting any load to the EVM output. If there is uncertainty as to the load specification, please contact a TI field representative.

During normal operation, some circuit components may have case temperatures greater than +35°C. The EVM is designed to operate properly with certain components above +85°C as long as the input and output ranges are maintained. These components include but are not limited to linear regulators, switching transistors, pass transistors, and current sense resistors. These types of devices can be identified using the EVM schematic located in the EVM User's Guide. When placing measurement probes near these devices during operation, please be aware that these devices may be very warm to the touch.

Mailing Address: Texas Instruments, Post Office Box 655303, Dallas, Texas 75265
Copyright © 2008, Texas Instruments Incorporated

IMPORTANT NOTICE

Texas Instruments Incorporated and its subsidiaries (TI) reserve the right to make corrections, modifications, enhancements, improvements, and other changes to its products and services at any time and to discontinue any product or service without notice. Customers should obtain the latest relevant information before placing orders and should verify that such information is current and complete. All products are sold subject to TI's terms and conditions of sale supplied at the time of order acknowledgment.

TI warrants performance of its hardware products to the specifications applicable at the time of sale in accordance with TI's standard warranty. Testing and other quality control techniques are used to the extent TI deems necessary to support this warranty. Except where mandated by government requirements, testing of all parameters of each product is not necessarily performed.

TI assumes no liability for applications assistance or customer product design. Customers are responsible for their products and applications using TI components. To minimize the risks associated with customer products and applications, customers should provide adequate design and operating safeguards.

TI does not warrant or represent that any license, either express or implied, is granted under any TI patent right, copyright, mask work right, or other TI intellectual property right relating to any combination, machine, or process in which TI products or services are used. Information published by TI regarding third-party products or services does not constitute a license from TI to use such products or services or a warranty or endorsement thereof. Use of such information may require a license from a third party under the patents or other intellectual property of the third party, or a license from TI under the patents or other intellectual property of TI.

Reproduction of TI information in TI data books or data sheets is permissible only if reproduction is without alteration and is accompanied by all associated warranties, conditions, limitations, and notices. Reproduction of this information with alteration is an unfair and deceptive business practice. TI is not responsible or liable for such altered documentation. Information of third parties may be subject to additional restrictions.

Resale of TI products or services with statements different from or beyond the parameters stated by TI for that product or service voids all express and any implied warranties for the associated TI product or service and is an unfair and deceptive business practice. TI is not responsible or liable for any such statements.

TI products are not authorized for use in safety-critical applications (such as life support) where a failure of the TI product would reasonably be expected to cause severe personal injury or death, unless officers of the parties have executed an agreement specifically governing such use. Buyers represent that they have all necessary expertise in the safety and regulatory ramifications of their applications, and acknowledge and agree that they are solely responsible for all legal, regulatory and safety-related requirements concerning their products and any use of TI products in such safety-critical applications, notwithstanding any applications-related information or support that may be provided by TI. Further, Buyers must fully indemnify TI and its representatives against any damages arising out of the use of TI products in such safety-critical applications.

TI products are neither designed nor intended for use in military/aerospace applications or environments unless the TI products are specifically designated by TI as military-grade or "enhanced plastic." Only products designated by TI as military-grade meet military specifications. Buyers acknowledge and agree that any such use of TI products which TI has not designated as military-grade is solely at the Buyer's risk, and that they are solely responsible for compliance with all legal and regulatory requirements in connection with such use.

TI products are neither designed nor intended for use in automotive applications or environments unless the specific TI products are designated by TI as compliant with ISO/TS 16949 requirements. Buyers acknowledge and agree that, if they use any non-designated products in automotive applications, TI will not be responsible for any failure to meet such requirements.

Following are URLs where you can obtain information on other Texas Instruments products and application solutions:

Products		**Applications**	
Amplifiers	amplifier.ti.com	Audio	www.ti.com/audio
Data Converters	dataconverter.ti.com	Automotive	www.ti.com/automotive
DSP	dsp.ti.com	Broadband	www.ti.com/broadband
Clocks and Timers	www.ti.com/clocks	Digital Control	www.ti.com/digitalcontrol
Interface	interface.ti.com	Medical	www.ti.com/medical
Logic	logic.ti.com	Military	www.ti.com/military
Power Mgmt	power.ti.com	Optical Networking	www.ti.com/opticalnetwork
Microcontrollers	microcontroller.ti.com	Security	www.ti.com/security
RFID	www.ti-rfid.com	Telephony	www.ti.com/telephony
RF/IF and ZigBee® Solutions	www.ti.com/lprf	Video & Imaging	www.ti.com/video
		Wireless	www.ti.com/wireless

Mailing Address: Texas Instruments, Post Office Box 655303, Dallas, Texas 75265
Copyright © 2008, Texas Instruments Incorporated